Thin purenit honeycomb panels

Adam MAJEWSKI, Jerzy SMARDZEWSKI

Department of Furniture Design, Faculty of Wood Technology, Poznan University of Life Sciences

Abstract: Light honeycomb sandwich panels are commonly used as thick elements of cabinet furniture. Constructors occasionally use them as horizontal shelves. The main goal of the study was to create light honeycomb sandwich panels of recycled material and to determine their mechanical properties. Facings were made of purenit. Purenit is a material obtained by a recycling process of polyurethane foams and vehicle interior elements. Colour, structure and processing parameters of purenit are similar to properties of particleboards. The core of the sandwich panel was made of paper honeycomb with hexagonal cells. The shape of cells was changed to obtain panels with different core stiffness. Cells sizes were chosen on the basis of results of numerical calculations. Subsequently, physical models of preferred sandwich structure were made and their mechanical properties were determined. The results were compared with the results of investigations of similar sandwich panels with paper core and facing made of HDF.

Keywords: honeycomb panels, purenit, HDF, cell-wall angle, numerical calculation

1 Introduction

Deficit of wooden raw materials as well as their high prices cause that furniture manufacturers employ light cell boards more readily than earlier. Usually, they are used as vertical construction elements of cabinet furniture. Shelves or horizontal partitions should be characterised by greater thickness due to their low stiffness (Barboutis et al., 2005; Sam-Brew et al., 2011). Determination of elastic properties of these materials is conducted in accordance with the EN 310:1993 standard. So far, elasticity modulus and bending strength of wood-derived panels, including, among others: particleboards, OSBs, MDFs, HDFs as well as plywood have been determined (Kociszewski et al., 2003; Wilczyński et al. 2004, 2007; Wilczyński 2011). Wider experiments on mechanical properties of cell boards embraced structures manufactured from metal. Those studies described strength properties of sandwich-type aluminium plates in bending, compression and stability tests (Jen et al. 2008; Khan 2006; Paik et al. 1999; Said et al. 2009). Orthotropic properties of the aluminium core in the form of a honeycomb were determined (Schwingshackl et al. 2006). A novel approach was proposed to the analytical description of the plate core by putting forward a solution consisting in combining elastic properties of the core with geometry and mechanical properties of the material from which the core was made (Meraghni et al. 1999). A few articles deal with modelling of mechanical properties of cell panels with a paper honeycomb (Seidl 1956). Sam-Brew et al. (2011) carried out investigations on the influence of the type of paper, cell orientation and their height and arrangement on stiffness and strength of cell panels. Wang and Wang (2008, 2010) ascertained the effect of density and moisture content of cell boards on the stability of the paper core. A mathematical model was also elaborated of the dependence between the absorption energy of cell panels and their moisture content (Wang and Ping 2010). Smardzewski and Prekrat (2012) demonstrated that cores of cell boards manufactured from HDF timber facings and irregular hexagonal honeycomb cells equalised well strain differences between board layers. Stiffness and strength of cell panels are also significantly influenced by paper mass and cell dimensions. Core auxetic properties of the cell board and the kind of material of timber facings exert a significant impact on cell board

stiffness (Smardzewski 2013). It is evident from the review of literature on the subject that, so far, cell panels with a paper core and facings from HDF or MDF boards have been investigated and there is lack of experiments reporting research results on cell boards with facings manufactured from recycled materials. In particular, nothing is known about properties of such materials manufactured using purenit. Purenit is a material obtained from recycling of polyurethane foams and elements from car equipment. With respect to its colour, structure and processing properties, the material is similar to particleboards.

The objective of the research project was to determine the effect of the inclination angle of cell walls on the elastic properties of samples manufactured from a paper honeycomb of hexagonal cells and purenit facings. The experiments were realised by carrying out empirical tests and comparing the obtained results with the results of numerical calculations.

2 Materials and test method

Honeycomb panels measuring 16 x 200 x 800 mm were prepared for laboratory experiments. The experimental boards were manufactured from HDF facings and purenit of h_F = 3 mm thickness and paper hexagonal honeycomb of h_C = 10 mm height, paper thickness of t = 0.2 mm and paper grammage of 140 g/m^2 (Fig.1). The board was manufactured in laboratory conditions using for this purpose paper and glue provided by Axxion Industries Polska Ltd. Core cells were extended in such a way as to obtain two different inclination angles of their walls: φ≈55° and φ≈66°. After stretching, the paper cores were scanned. The cell image after scanning was stretched in the CAD system to the height of 10 mm (Fig.2). Dimensions of hexagonal cells are presented in Figure 3. From the obtained sheets, ten samples of dimensions complying with the requirements of the EN 310: 1993 standard were cut out for each type of facing and cell dimension (Fig. 4). In all, forty samples according to the specification given in Table 1 were prepared.

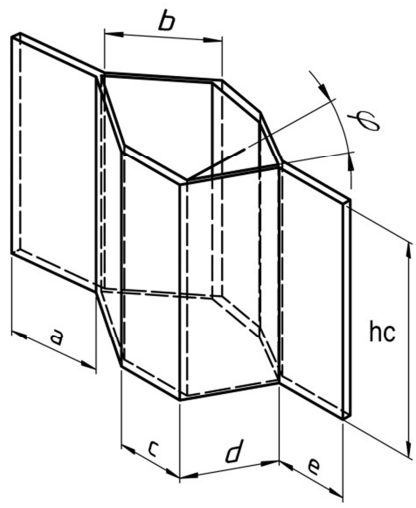

Figure 1. Model of the core hexagonal cell

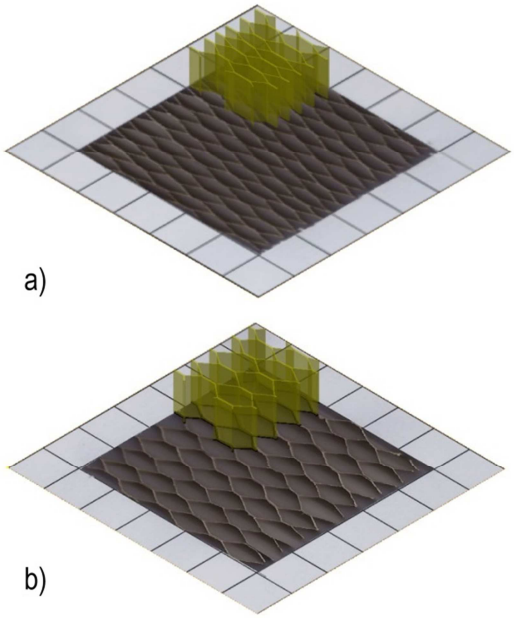

Figure 2. Illustration of cell walls extended on the basis of scanned images: a) φ≈ 66°, b) φ≈55°

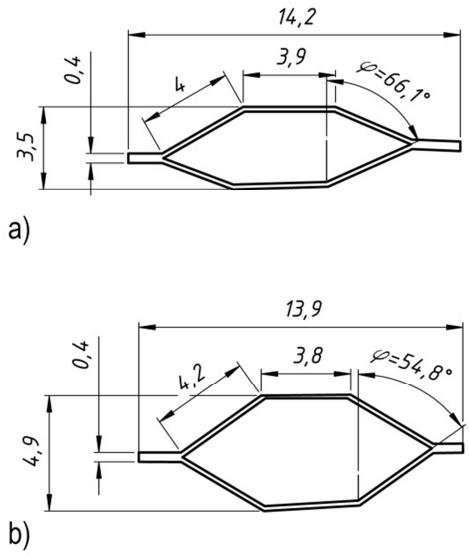

Figure 3. Cell dimensions depending on wall inclination angle: a) φ≈ 66°, b) φ≈55°

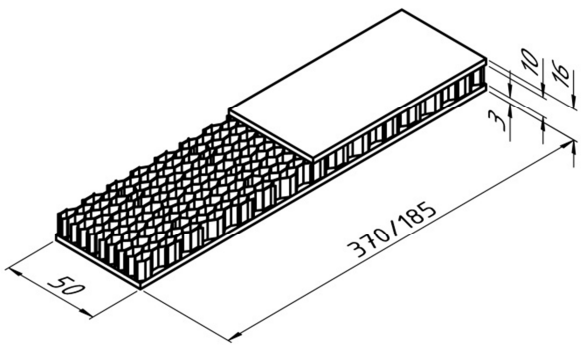

Figure 4. Dimensions of samples used in experiments

Table 1. Properties of honeycomb panels

Materials		Symbol	Angle φ
1		2	3
HDF	3 [mm]	HB	66°
Paper honeycomb	10 [mm]		
HDF	3 [mm]		
HDF	3 [mm]	HC	55°
Paper honeycomb	10 [mm]		
HDF	3 [mm]		
PUR	3 [mm]	PB	66°
Paper honeycomb	10 [mm]		
PUR	3 [mm]		
PUR	3 [mm]	PC	55°
Paper honeycomb	10 [mm]		
PUR	3 [mm]		

Using the same HDF board sheets and purenit employed as cell board facings, 10 samples each were prepared to determine their linear elasticity modulus in accordance with EN 310: 1993 standard. On the basis of the performed experiments, the following values were obtained: E_{HDF} = 5370 MPa (STD = 236 MPa), E_{PUR} = 500 MPa (STD = 20.6 MPa). Also modulus of linear elasticity (MOE) and modulus of rupture (MOR) of cell panels were determined in accordance with this standard. Experiments were carried out on a Zwick 1445 test machine employing the loading velocity of 10 mm/min. and measuring the applied force with up to 0.01 N accuracy and deflection with up to 0.01 mm accuracy.

3 Numerical analysis

Four numerical models of beams of 16 x 50 x 185 mm dimensions were prepared. The models consisted of two isotropic facings 3 mm thick to which HDF or purenit elastic properties were attributed and paper core of hexagonal cells to which paper elastic properties were attributed (Fig.5; Tab.3).

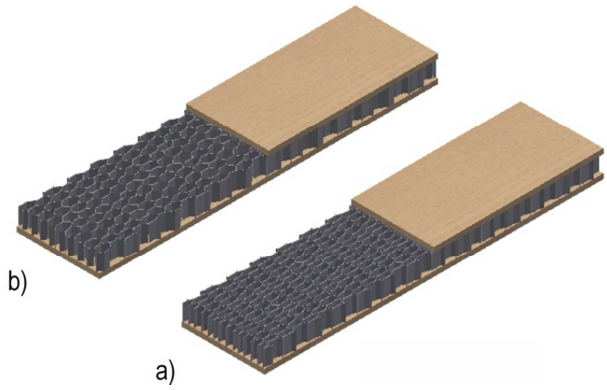

Figure 5. Models of honeycomb panels: a) HB, PB φ≈66°, b) HC, PC φ≈55°

Table 2. Material elastic properties assumed for numerical calculations

Designation	Value
E_{HDF} [MPa]	5370
E_{PUR} [MPa]	500
E_P [MPa]	2000(1)

Paper Modulus of Elasticity based on (Szewczyk 2010, Uesaka et. al. 1979)

Next, appropriate numerical models of sandwich beams were constructed using for this purpose 20-node finite elements of brick type in the environment of the Autodesk Simulation Multiphysics® 2013 program. The mesh model (Fig.6) constituted a cuboid with the length equal to half the length of the real sample. The beam was supported in accordance of the EN 310: 1993 standard and loaded with the edge force for which the real beam deflected by 3 mm. It was assumed that the quality assessment criterion of model beams would be the value of deflection of beams measured in the direction of loading.

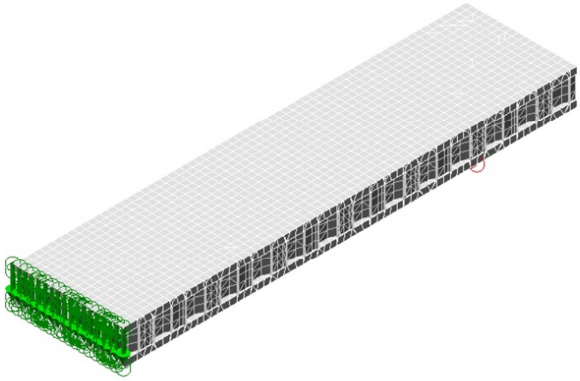

Figure 6. FEM model of samples subjected to bending

4 Results and discussion

Figure 7 illustrates the comparison of the bending strength of the manufactured cell panels. It is evident from this figure that the materials with the purenit facings (PB and PC) exhibited lower resistance in comparison with the panels with the HDF facings (HB and HC). This difference amounted to 260% and 280%. The increase in strength was significantly affected by the cell wall inclination angle. The increase of this angle from φ = 55° to φ = 66° caused that the strength increased by 24.2% in the case of panels with HDF facings (HC and HB) and by 34.2% in the case of panels with purenit facings (PC and PB).

Table 3. Comparative strength properties of the honeycomb panels

Symbol	MOE [MPa]			MOR [MPa]			Density
	Average	STD	Max/Min	Average	STD	Min/Max	[g/cm^3]
1	2	3	4	5	6	7	8
HC	2247	127	2509/2106	10,7	1,2	11,3/9,6	0,350
HB	2562	153	2796/2384	13,3	2,7	18,1/10,5	0,381
PC	284	42	339/241	3,8	0,5	4,5/2,7	0,267
PB	374	31	422/337	5,1	0,9	6,3/3,9	0,306

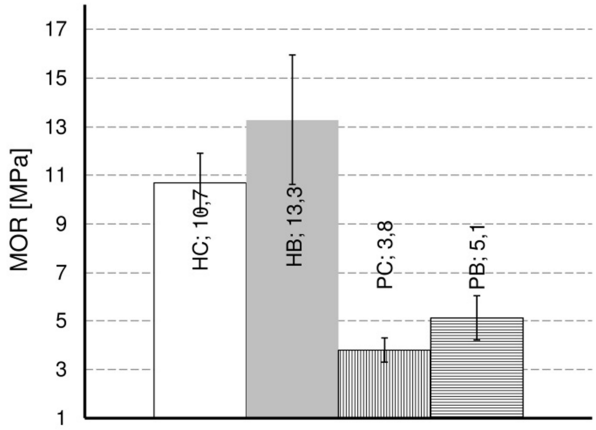

Figure 7. Bending strength of honeycomb panels

A change in the cell wall inclination angle exerts, in an obvious manner, influence on apparent density of the manufactured material. It is evident from Table 3 that the increase in the value of this angle for panels with HDF facings increased the apparent density of the material by 8.8%, while for panels with purenit facings – by 14.6%. At the same time, a significant correlation developed between the increase of the material apparent density and the strength increase of the manufactured timber materials. To exemplify this, the results of numerical calculations for HC and PC honeycomb panels with the wall inclination angle of $\varphi \approx 55^{o}$ exposed to a load causing sample deflection equalling 3 mm were shown. It can be concluded from this illustration that the greatest reduced strains in the core of the HC honeycomb panel (Fig.8c) were concentrated at half length of the bent sample as well as in the top and bottom fibres of the core cell walls. In the case of the PC honeycomb panel, maximal reduced strains occurred away from the middle of the bent sample length (Fig.8d). Simultaneously, the value of these strains was by 66% higher in the case of PC panels. This can be attributed, primarily, to the fact that the panel purenit facings – with their elasticity modulus tenfold lower in comparison with to the modulus value of HDF panels (E_{HDF}/E_{PUR} = 10.74) - transferred normal strains in external sample strips worse. This caused increased effort of the cell core.

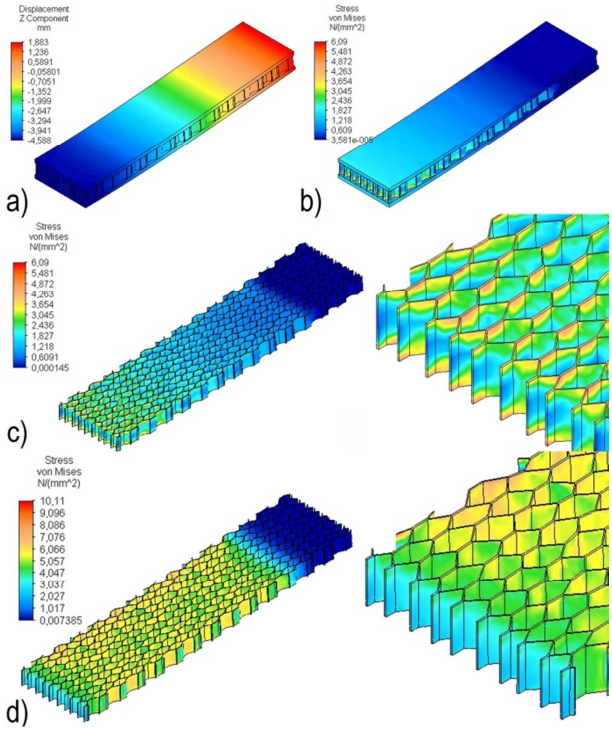

Figure 8. An example of numerical calculations for an HC honeycomb panel of the cell inclination angle of φ ≈ 55°: a/ deflection (mm), b/ reduced strains in facings (MPa), c/ reduced strains in the core (MPa) and d/ a PC honeycomb panel of the cell inclination angle of φ ≈ 55°, reduced strains in the core (MPa)

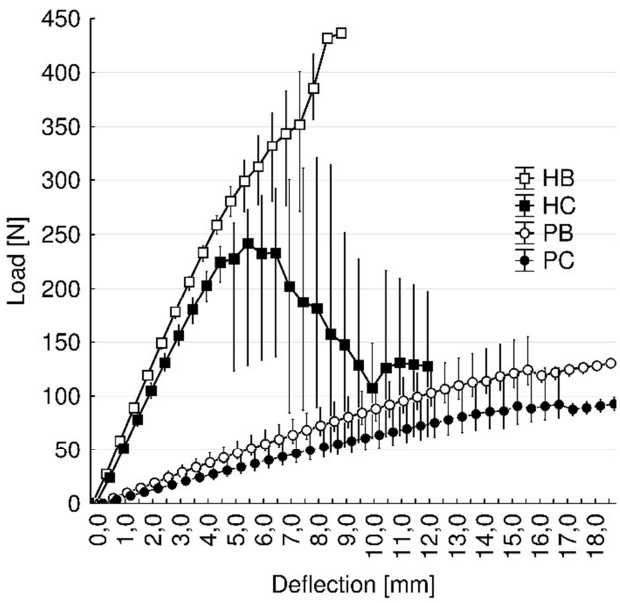

Figure 9. Stiffness of honeycomb panels

Stiffness of facings also exerts influence on the stiffness of the manufactured materials. Figure 9 presents the dependence of loading on the deflection of the examined materials. It is evident from it that materials with HDF facings were considerably stiffer and less sensitive to deflection in comparison with the materials produced using purenit facings. In addition, stiffness of those materials was also affected significantly by the inclination angle of cell walls. This is well illustrated quantitatively in Table 3 and Figure 10. It is clear from this Figure that the materials with purenit facings (PB and PC) were characterised by a lower

MOE value in relation to panels with HDF facings (HB and HC). This difference ranged from 685% to 791%. The increase of the MOE value was also influenced by the inclination angle of cell walls. The increase of this angle from φ = 55° to φ = 66° caused that the MOE increased by 14.0% for panels with HDF facings (HC and HB), whereas in the case of panels with purenit facings (PC and PB), the resistance increased by 31.6%. Also in this case, a significant correlation was found between the increase of the material apparent density and increase in MOE (Tab.3).

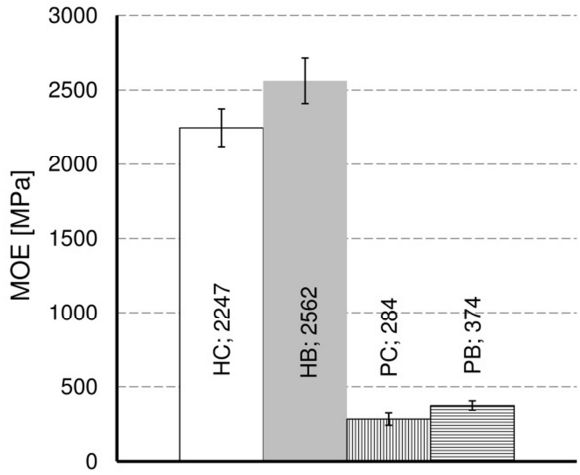

Figure 10. Modulus of linear elasticity of honeycomb panels

On the basis of numerical calculations, values of deflections measured half through the sample length in the direction of the edge loading were obtained which were then compared with the values of empirical measurements. The results of this comparison are presented in Table 4. It is evident from the Table that displacements determined numerically differ from laboratory values by -4.5% to 14%. This means that the numerical model was well-matched since it supplied calculation results similar to real models.

Table 4. Comparison of experimental and numerical displacements

Symbol	Displacement [mm]		Differences
	Experimental	FEM	[%]
HC	3,00	3,13	4,15
HB	3,01	3,29	8,51
PC	3,00	2,88	-4,51
PB	3,01	3,50	14,00

5 Conclusions

The following conclusions can be drawn on the basis of the analysis of the obtained research results: low stiffnesses of the purenit facings do not ensure satisfactory strength and stiffness of honeycomb panels; when the use of purenit is planned in the process of manufacture of cell panels, its MOE should be increased by three to four times; increased inclination angle of cell walls improves significantly the strength and stiffness of honeycomb panels; numerical modelling allows accurate prognostication of stiffness and strength of virtual prototypes of layered cell panels.

References

Barboutis I., Vassiliou, V. (2005): Strength properties of lightweight paper honeycomb panels for furniture. Proceedings of International Scientific Conference, 10th Anniversary of Engineering Design (Interior and Furniture Design) October 17-18, Sofia, Bulgaria.

EN 310:1993 Wood-based panels. Determination of modulus of elasticity in bending and of bending strength.

Jen Y.M., Chang L.Y. (2008): Evaluating bending fatigue strength of aluminum honeycomb sandwich beams using local parameters. International Journal of Fatigue 30: 1103–1114.

Khan M.K. (2006): Compressive and lamination strength of honeycomb sandwich panels with strain energy calculation from ASTM standards. Proceedings of the Institution of Mechanical Engineers, Part G: Journal of Aerospace Engineering 220: 375-386

Kociszewski M., Tydryszewski K., Wilczyński M. (2003): Effect of loading direction on mechanical properties of wood-based panels in bending. Folia Forestalia Polonica 34: 45-51.

Meraghni F., Desrumaux F., Benzeggagh M.L. (1999): Mechanical behaviour of cellular core for structural sandwich panels. Composites Part A 30: 767–779.

Paik J.K., Thayamballi A.K., Kim G.S. (1999): The strength characteristics of aluminum honeycomb sandwich panels. Thin-Walled Structures 35: 205–231.

Said M.R., Tan C.F. (2009): Aluminium honeycomb under quasi-static compressive loading: an experimental investigation. Suranaree Journal of Science and Technology 16:1-8.

Sam-Brew S., Semple K., Smith G. (2011): Preliminary experiments on the manufacture of hollow core composite panels. Forest Products Journal 61: 381-389.

Schwingshackl C.W., Aglietti G.S., Cunningham R.R. (2006): Determination of honeycomb material properties: Existing theories and an alternative dynamic approach. Journal of Aerospace Engineering 19: 177-183.

Seidl R.J. (1956): Paper-honeycomb cores for structural sandwich panels. Forest Products Laboratory Madison 5, Wisconsin. Forest Service U. S. Department of Agriculture.

Smardzewski J., Prekrat S. (2012): Modelling of thin paper honeycomb panels for furniture. International Conference Ambienta, Wood is Good – With Knowledge and Technology to a Competitive Forestry and Wood Technology Sector, Zagreb: 179-186.

Smardzewski J. (2013): Elastic properties of cellular wood panels with hexagonal and auxetic cores. Holzforschung 67(1): 87–92.

Szewczyk W. (2010): Packaging Paper – Orthotropic Elastic Material. Przegląd papierniczy 66: 205-209.

Uesaka T., Murakami K., Imamura R. (1979): Biaxial tensile behavior of paper. Tappi Journal 62: 111-114.

Wang D.M., Wang Z.W. (2008): Experimental investigation into the cushioning properties of honeycomb paperboard. Packaging Technology and Science 21: 309-316.

Wang D.M., Wang Z.W. (2010): Plateau Stress of Paper Honeycomb as Response to Various Relative Humidities. Packaging Technology and Science 23: 203–216.

Wang Z.W, Ping E Y. (2010): Mathematical modelling of energy absorption property for paper honeycomb in various ambient humidities. Materials and Design 31: 4321–4328.

Wilczyński A., Kociszewski M., Warmbier K. (2004): Investigations of mechanical properties in bending of particleboard layers. Folia Forestalia Polonica series b, 35: 49-57.

Wilczyński A., Kociszewski M. (2007): Bending properties of particleboard and MDF layers. Holzforschung, vol. 61: 717-722.

Wilczyński M. (2011): Elastic constants of veneer in beech plywood. Folia Forestalia Polonica series b 42: 37-47.

Corresponding author:
J. Smardzewski
Department of Furniture Design, Poznań University of Life Sciences, Wojska Polskiego 28,
60-637 Poznań, Poland
e-mail: jsmardzewski@up.poznan.pl